Sharklet

Power Tunable LED Shoebox Light

Tel: +86(0)755 29985870 Web: www.gielight.com Email: gielight@gielight.com

Address:Building B,Jinfeng Industrial Zone,Yonghe Road, Heping community,Fuhai Street,Bao'an District ,Shenzhen,China.

Product Features

- High lumen efficiency >150lm/w.
- IP65 rated for wet location.
- High-efficiency LED Driver, the wide range input voltage AC100-347V .
- 3 types of beam angle PC lens for option（TypeⅢ TypeⅣ TypeⅤ）
- Multi-function optional, easy to operate (Normal light, Photocell sensor, Microwave sensor+Photocell sensor, Time setting)
- Various of connectors available, easy to assemble.

Product structure introduction

The heat sink is made with high conductive aluminum by fin shape die casting, free convection, maximum thermal transfer. Seamless design ensures No possibility of any water leakage.

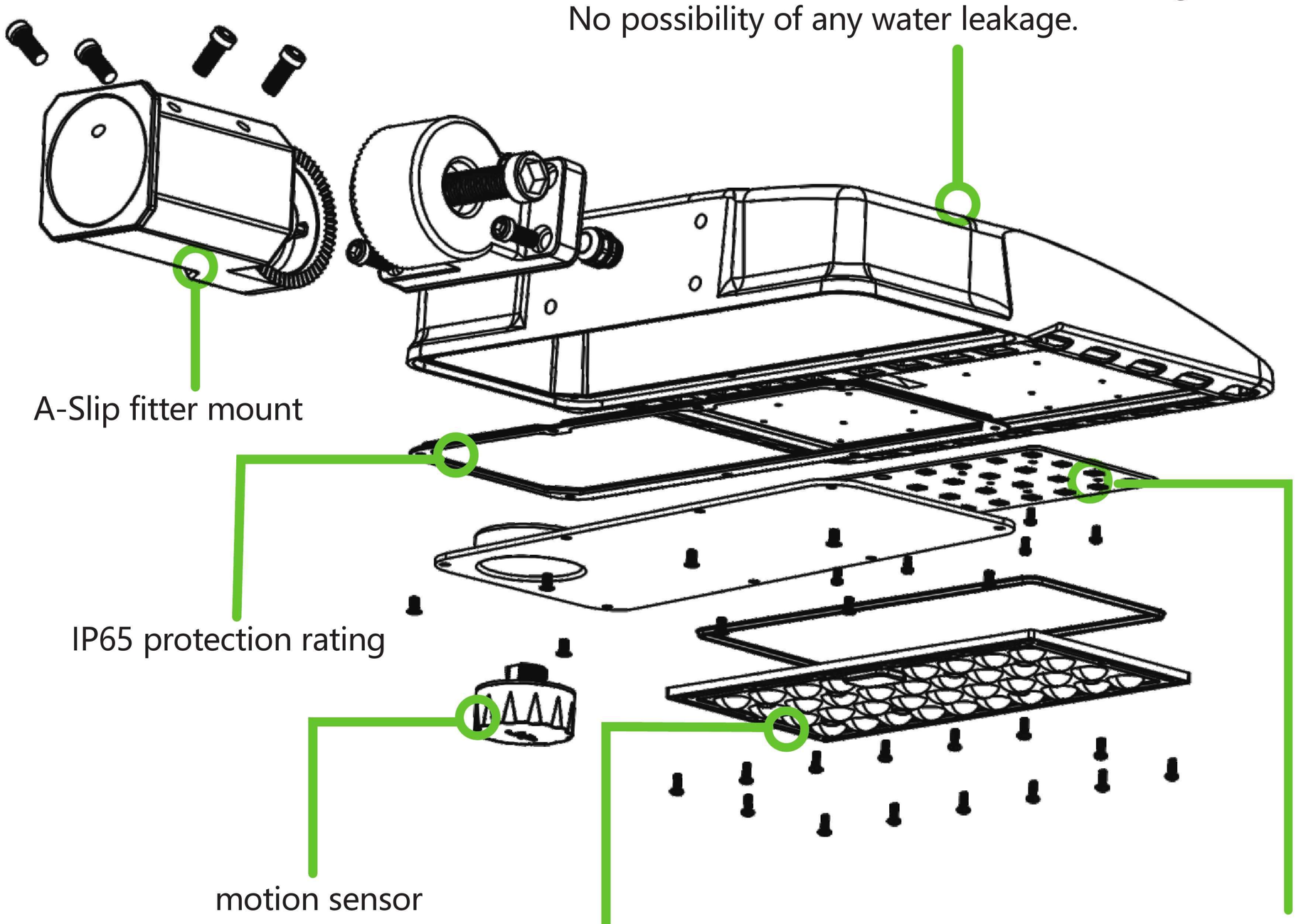

Specification

Part NO .	Power	Input Voltage	IP Rating	Lens angle	Input Current	PF	Light Efficacy	Ra	CCT
SXT-200W-H-H-XXXXK	100-150-200W	AC100-347V	IP 65	T3 T4 T5	2.0A	>0.95	150lm/w	70	4000-5700K
SXT-300W-H-H-XXXXK	200-240-300W	AC100-347V	IP 65	T3 T4 T5	3.0A	>0.95	150lm/w	70	4000-5700K
SXT-400W-H-H-XXXXK	300-350-400W	AC100-347V	IP 65	T3 T4 T5	4.0A	>0.95	150lm/w	70	4000-5700K

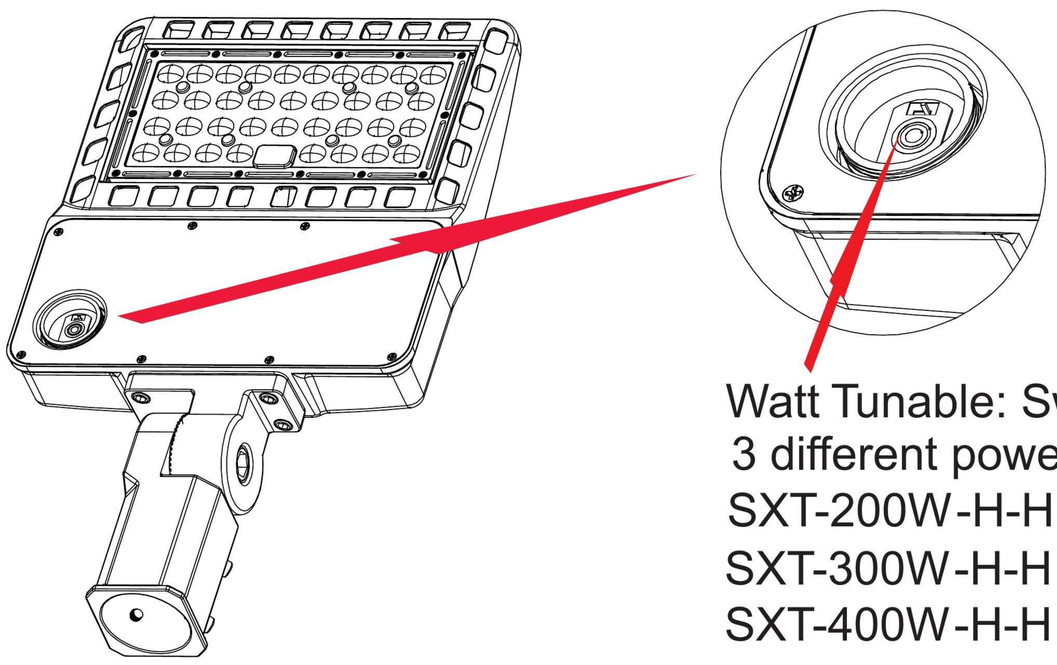

Watt Tunable: Switch
3 different power:
SXT-200W-H-H: 100-150-200W
SXT-300W-H-H: 200-240-300W
SXT-400W-H-H: 300-350-400W

Product Dimension

(Ⅰ)

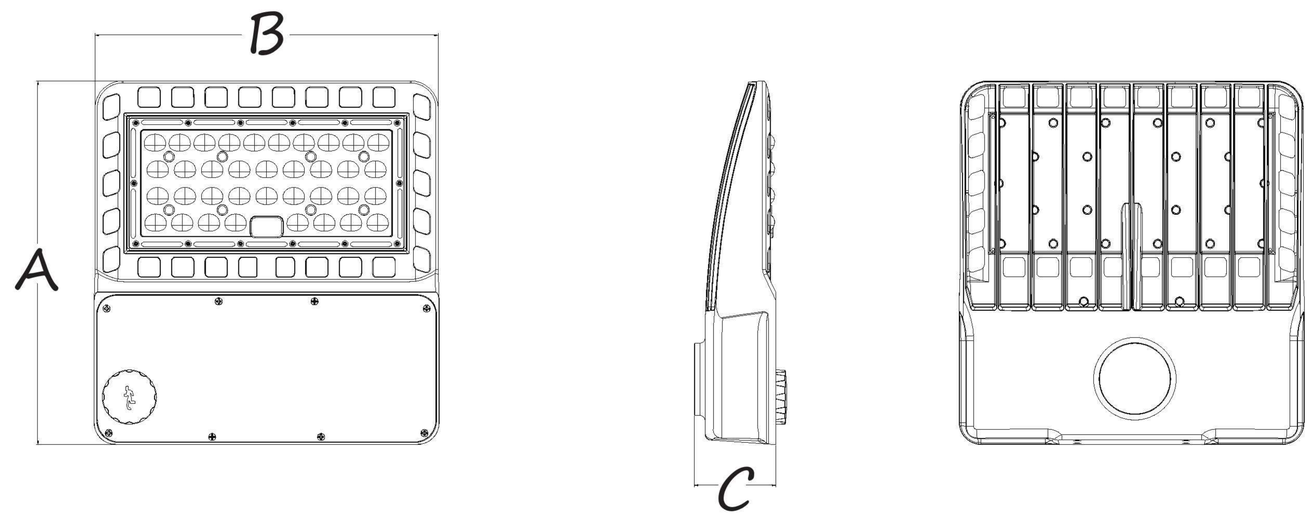

(Ⅱ)

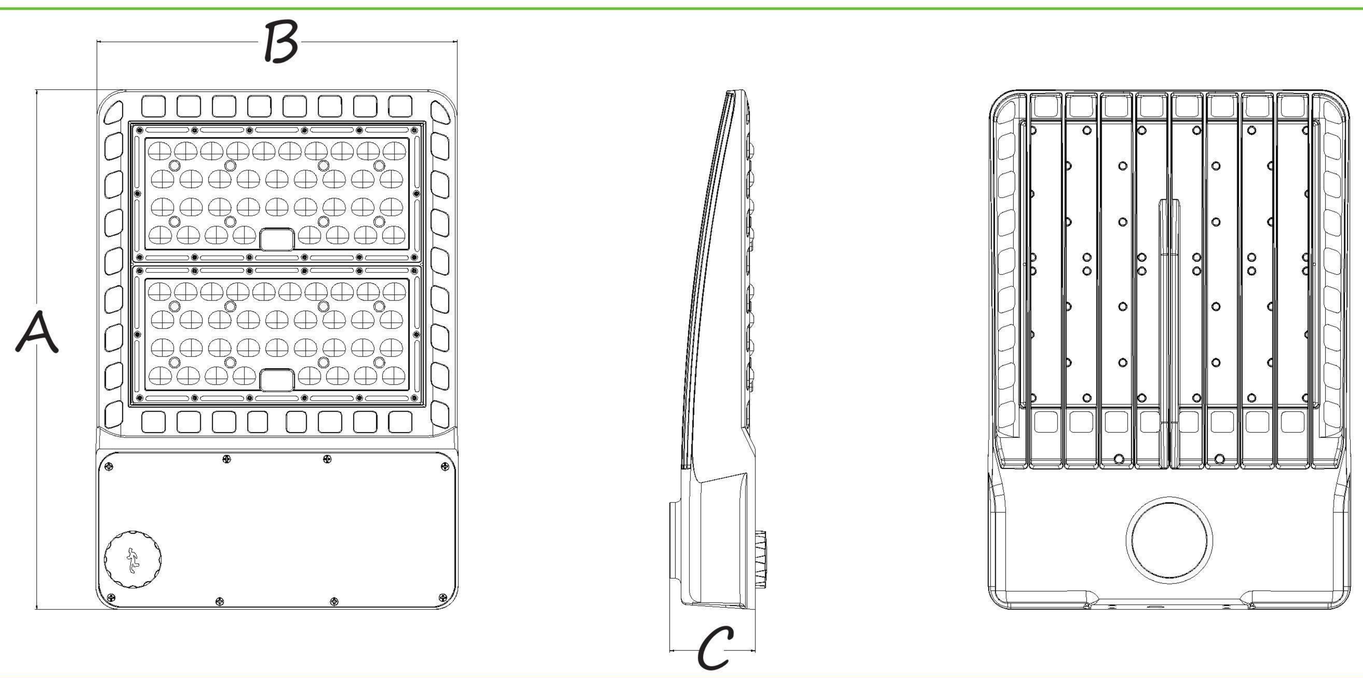

(Ⅲ)

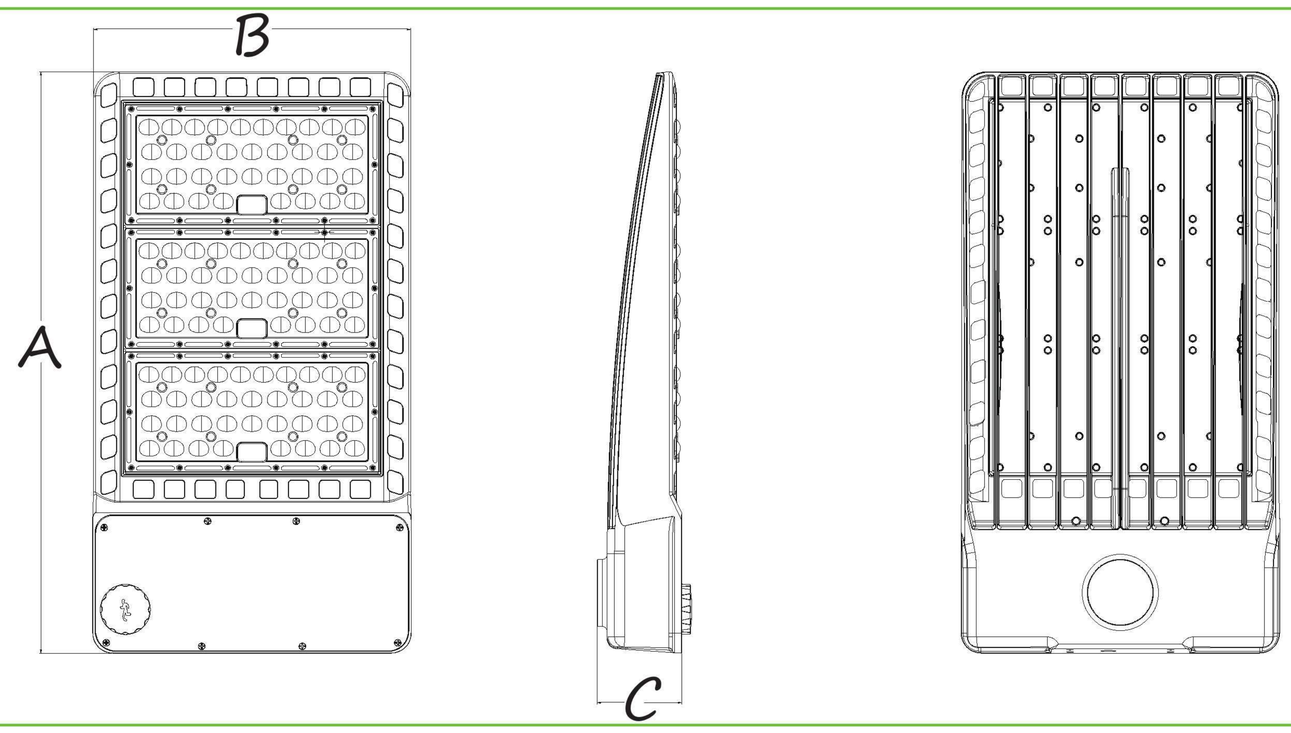

Mode	Photo	A (inch)(mm)	B (inch)(mm)	C (inch)(mm)
SXT-200W-H-H-XXXXK	Ⅰ	13.14″ (334mm)	12.44″ (316mm)	2.95″ (75mm)
SXT-300W-H-H-XXXXK	Ⅱ	17.91″ (455mm)	12.44″ (316mm)	2.95″ (75mm)
SXT-400W-H-H-XXXXK	Ⅲ	22.79″ (579mm)	12.44″ (316mm)	3.31″ (84mm)

Introduction of Motion sensor and programmble function:

Easy to assemble: rotate the old cap out of its position and replace it with new cap needed.

Function of each cap

A: ◉ Normal water proof cap

1:Just waterproof

B: ◉ Photocell sensor cap

1:Preset a lux value to detect the ambient light level. (Before shipping from the factory, the lux value can be set in advance)

2:Preset lux value with a remote controller (Customer can set the lux value with a remotor)

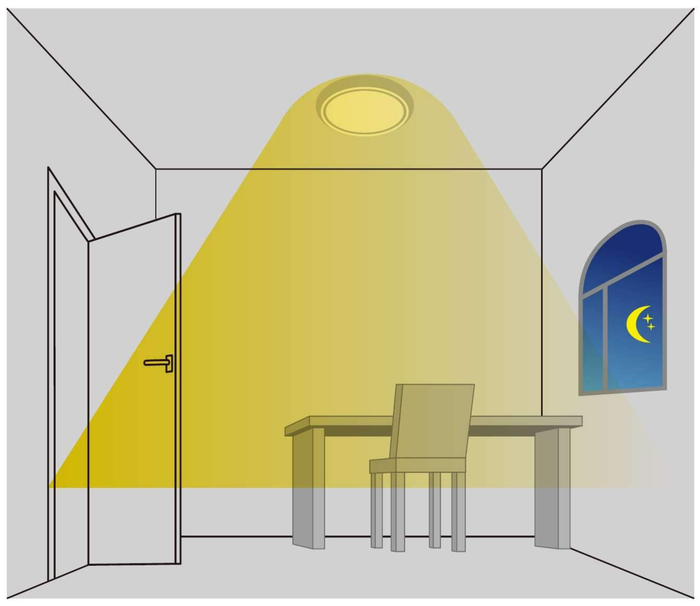

Lights on when ambient light level is lower than preset lux value.

Lights off when ambient light level is higher than preset lux value.

C: ◉ Photocell sensor+ microwave sensor cap

◉ Customer can set it according to actual needs with a remote.

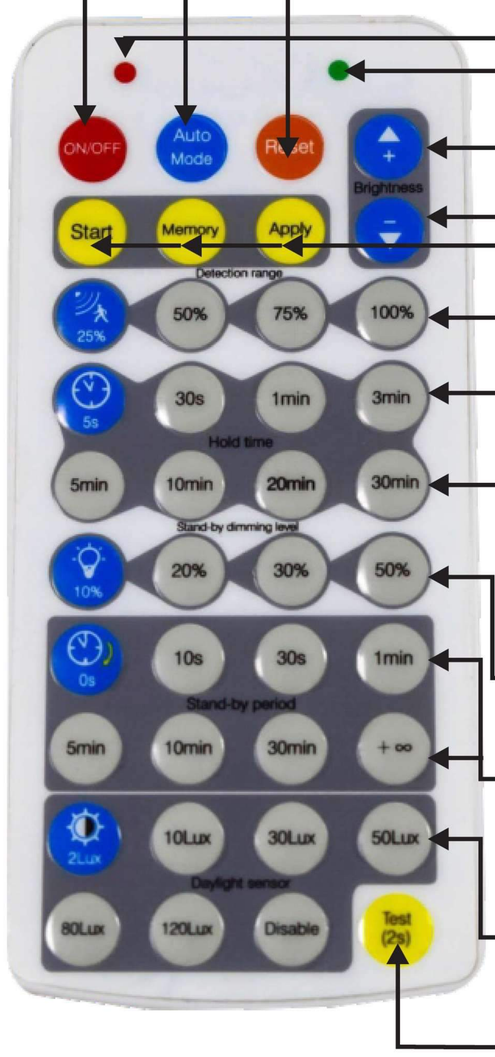

ON/OFF Press the "On/off" button, the light keeps permanently on or off.Press "Auto Mode ", "Reset" or "Apply" buttons to quit from this mode.

Auto Mode Press "Auto Mode" button, the sensor starts to work and all settings remain the same before the light gets switched on/off.

Reset 1.Press "Reset" button, change brightness to max level.
2.Press "Reset" button, products with DIP switch will be controlled by DIP switches; otherwise all the setting will be just initial, that is 100% detection range,hold time 5S, no stand-by time and daylight threshold disabled.

Flick after press any button

Flick only after press "Apply" button

+/- 1. To adjust brightness 10-100% in on/off mode.
2. To adjust highest brightenss 60-100% in sensor mode.

Start Press "Start" to customize scene, users can change detection range, daylight threshold, holdtime, standby dimming level and standby period.

Memory 1. Press "Memory" to save all the settings.
2. The settings remained as the last time if not get resetted values.

Apply 1. Press "Apply" to deliver the saved setting.
2. Press "Apply" without "memory" will make all the setting one-time operation.
3. Settings should be done within 30S, otherwise it exits memory mode.

Detection area Press to define detection area 100%/75%/50%/25%.

Hold time Press to define holdtime 5s/30s/1min/3min /5min/10min/20min/30min .

Stand-by dimming level Press to define stand-by dimming level 10%/20%/30%/50%.

Stand-by period Press to dePne stand-by period 0s/10s/30s/1min/5min/10min/30min/+∞.)

Note: "0s" means no standby period; "+∞" means unlimited standby period.

Daylight threshold Press to define daylight level 2Lux /10Lux /30Lux/50Lux/80Lux/120Lux/Disable.

Note: Disable means light will be turned on once sensor detects movement, regardless of the ambient lux.

Test (2s) The button "Test (2s)" is for testing purpose after commissioning.Pressing this button, the sensor goes to test mode (hold time is only 2s)

Detection Patterns

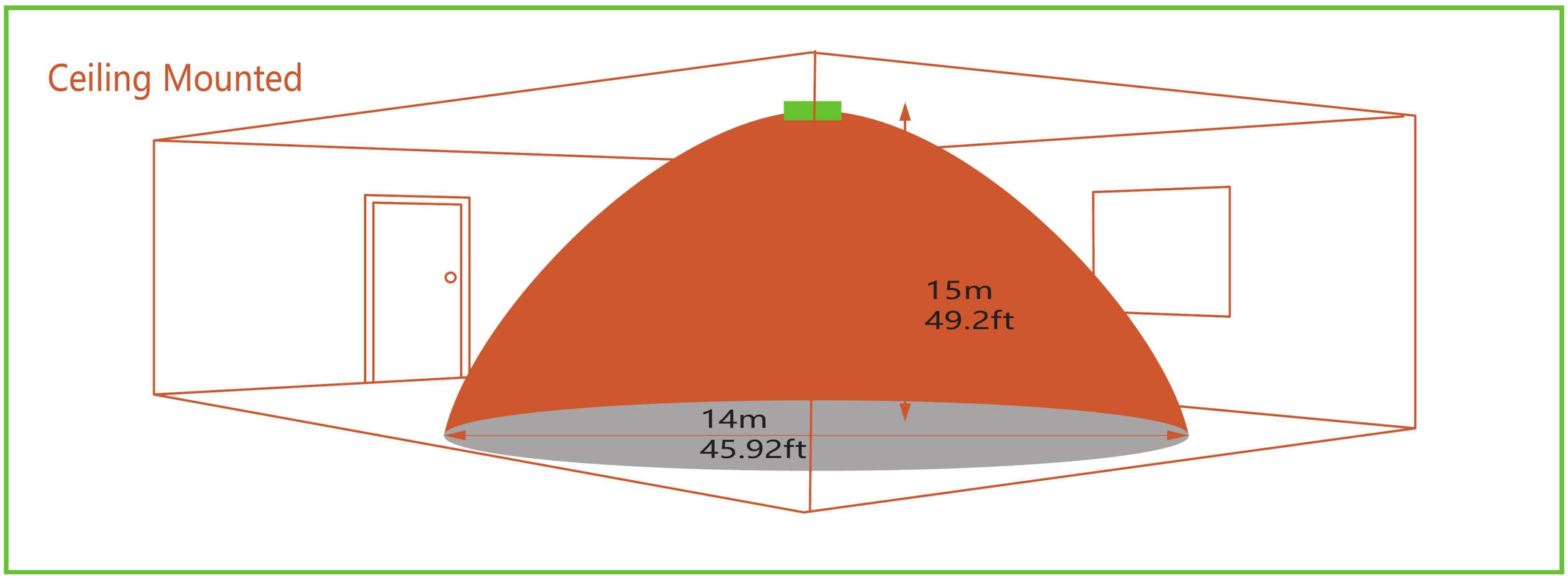

Technical data

Operating voltage	10-15VDC
Operating current	30mA±5%
Output	DIM1-10V
Stand-by power	<0.5W
Detection area	25%/50%/75%/100%
Hold time	5s/30s/1min/3min/5min/10min/20min/30min
Daylight threshold	2Lux/10Lux/30Lux/50Lux/80Lux/120Lux/Disable
Stand-by period	0s/10s/30s/1min/5min/10min/30min/+∞
Stand-by dimming level	10%/20%/30%/50%
Microwave frequency	5.8GHz±75MHz
Microwave power	<0.3mW
Mounting height	Max.15m/49.2ft
Detection range	Max.14m/45.92ft
Operating temperature	-20℃~+60℃

Lux on/o

Adopted dual PD technology, it is able to differentiate artificial light brightness from natural light after installed inside the fixture,and automatically turn off light when ambient brightness exceeds preset lux level.

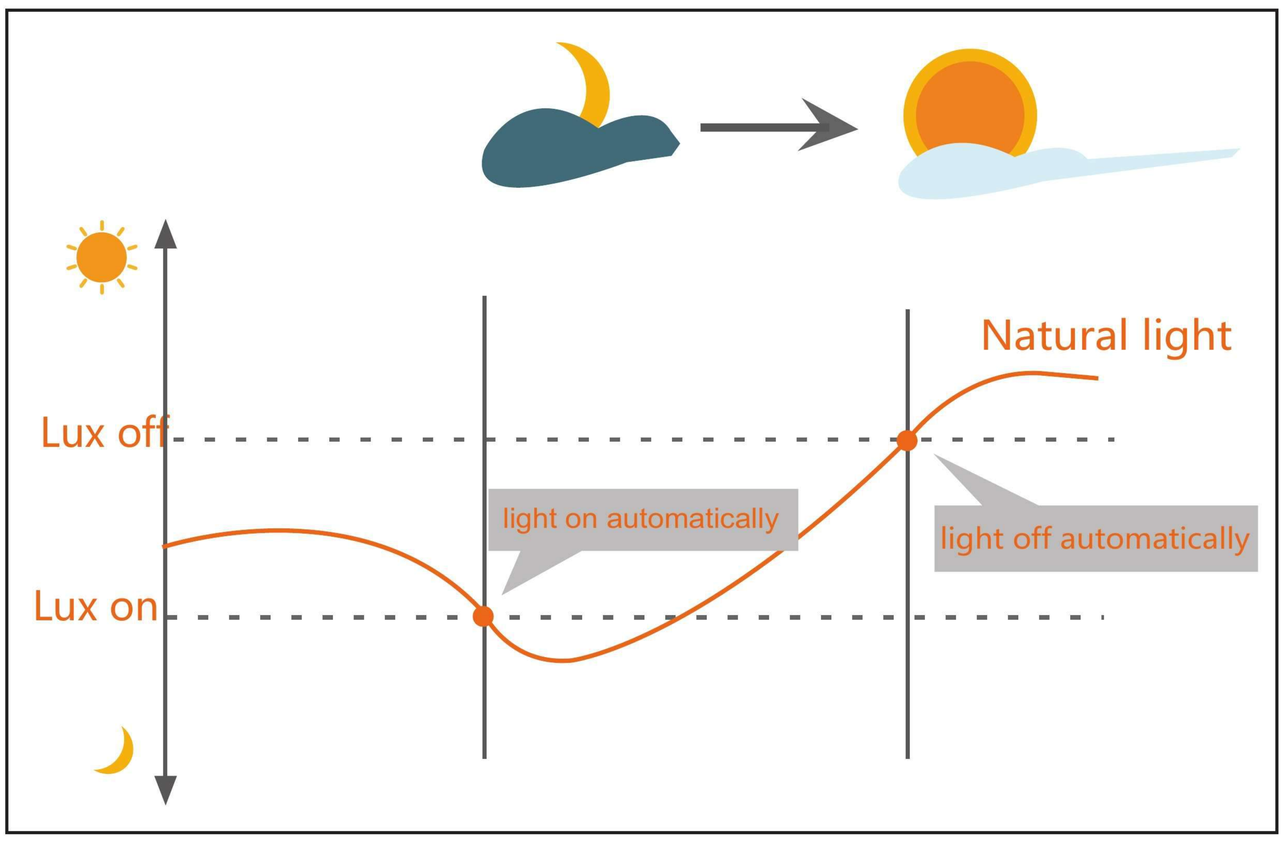

Preconditions to use the Lux-off function:

1. Standby period is +∞;
2. Standby dimming level is on 10%, or 30%;
3. Daylight threshold is on 30Lux, 50Lux, 80Lux or 120Lux.

Application——Lux on/o

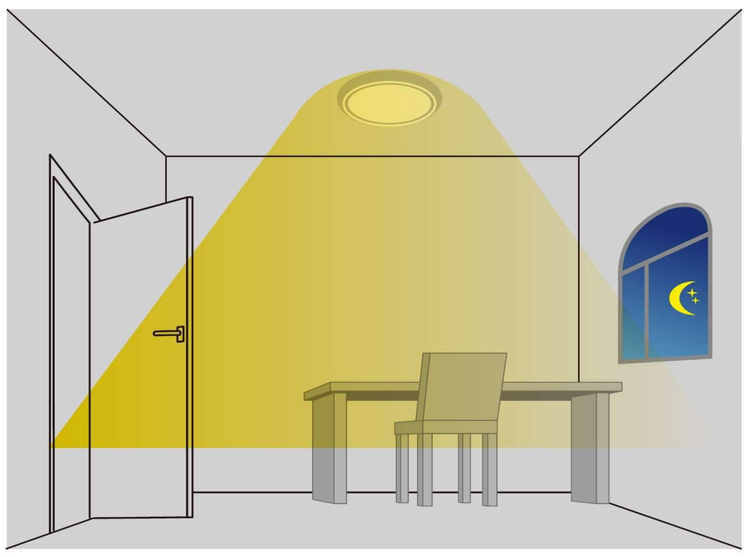

Light automatically on when ambient brightness is lower than preset lux level.

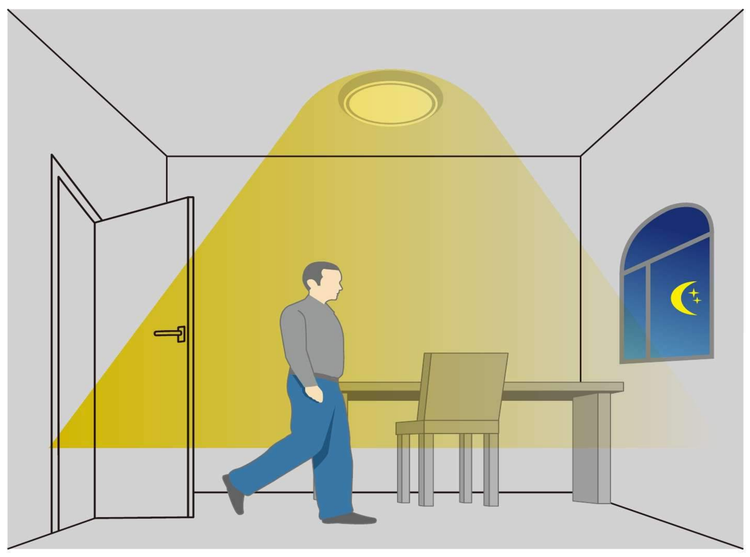

With insufficient ambient brightness, light dims to 100% when motion detected.

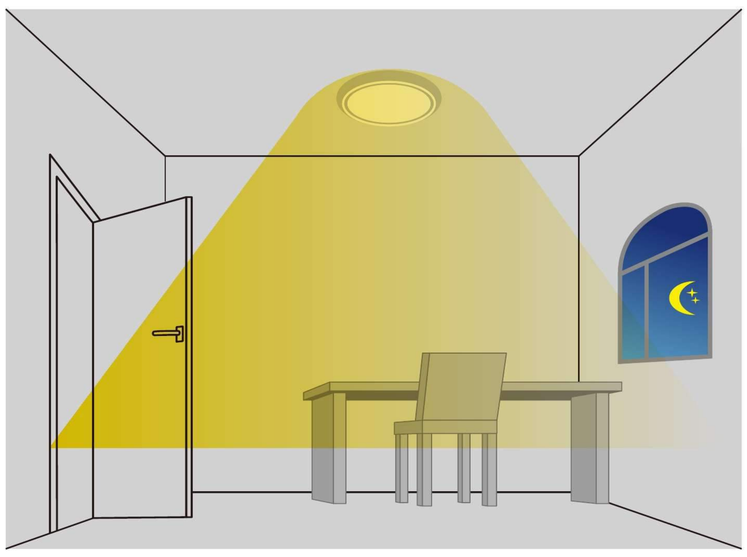

Light dims to standby level if no motion detected after holdtime.

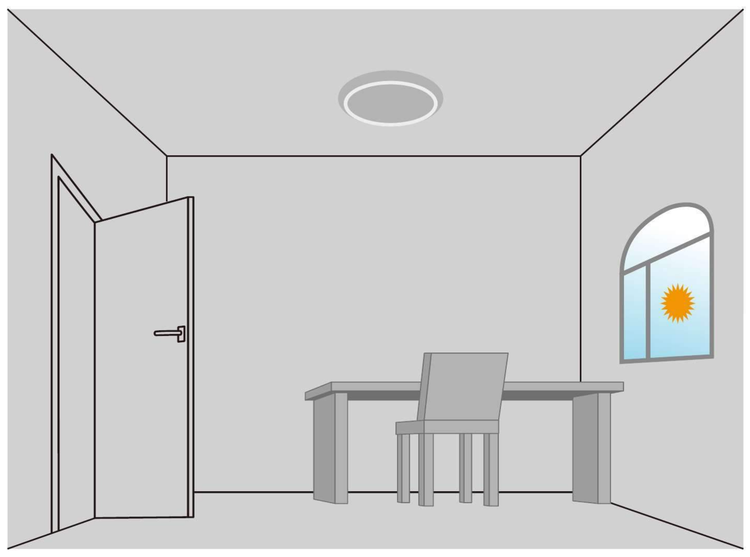

Light off when ambient lux level is higher than preset lux amount.

Application——Dimmable control/Corridor function

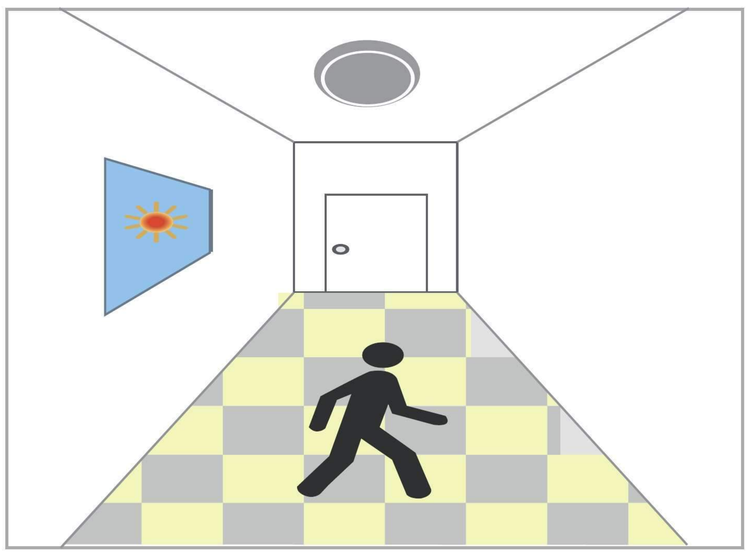

With sufficient daylight, even when motion detected, light remains OFF. After the stand-by period, light OFF.After last detection, the light will be

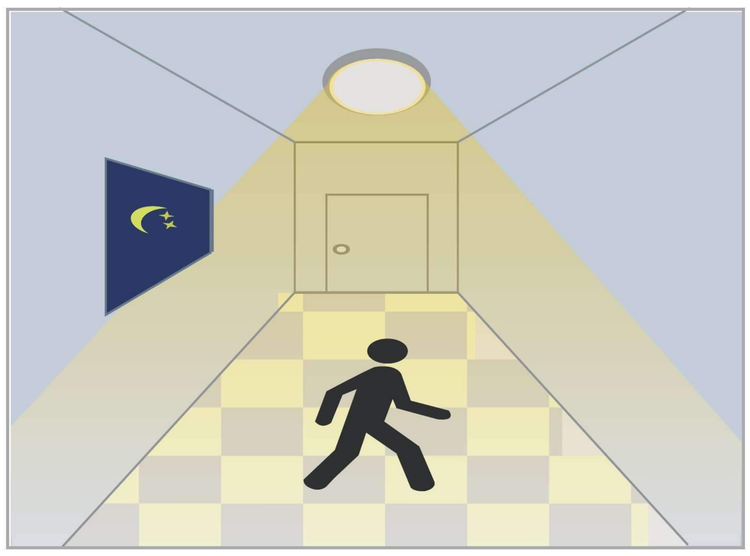

With insufficient daylight, when motion detected, light ON.

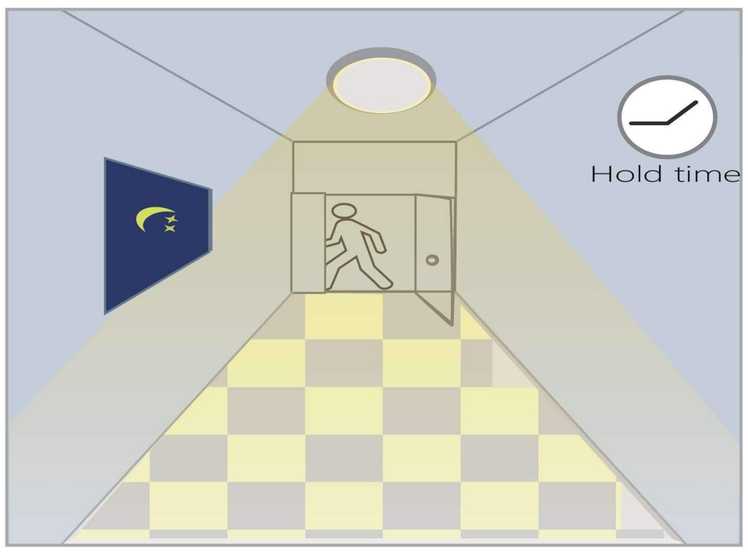

dimmed down to the stand-by dimming level(10%,20%,30% or 50%) after holdtime.

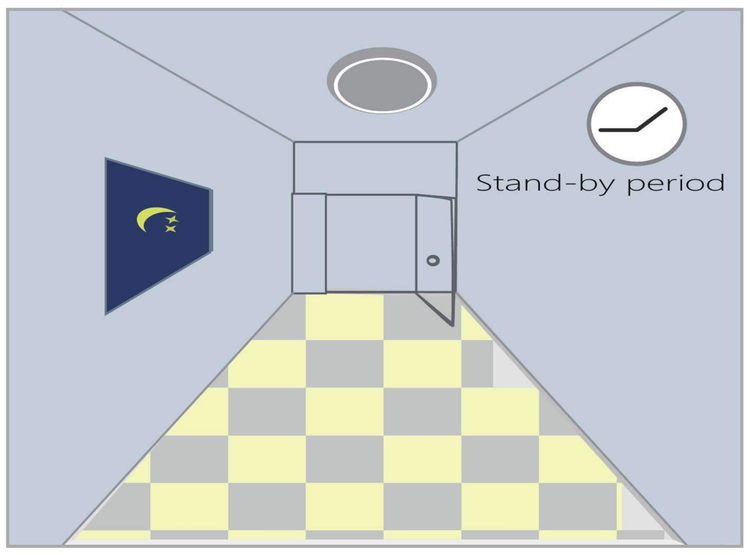

Light dims to standby level if no motion detected after holdtime.

Three types of Lens for option

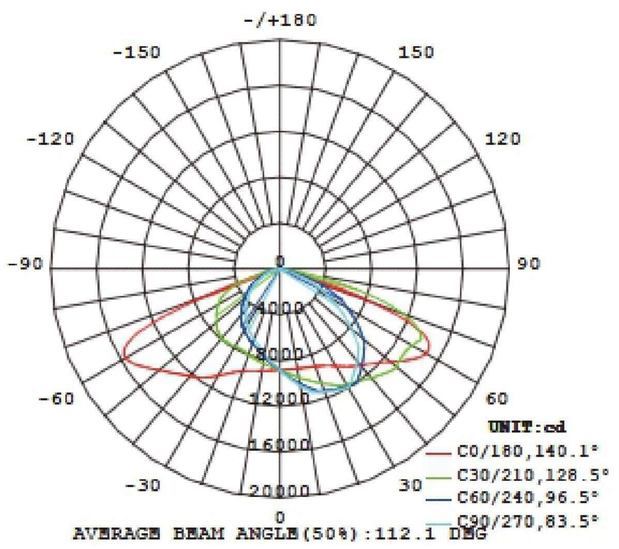

A:Type Ⅲ

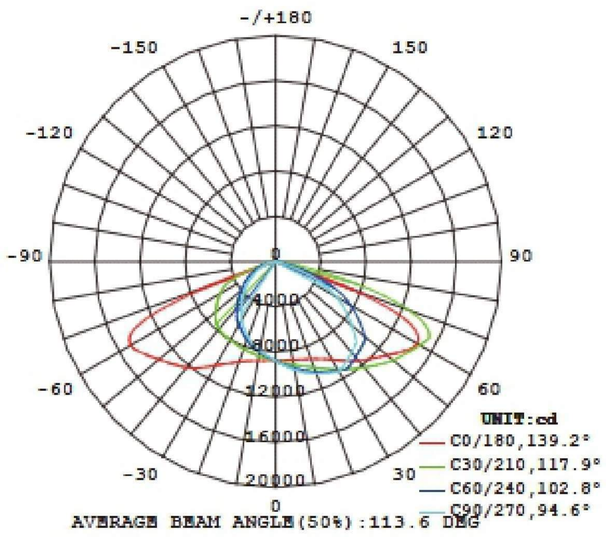

B:Type Ⅳ

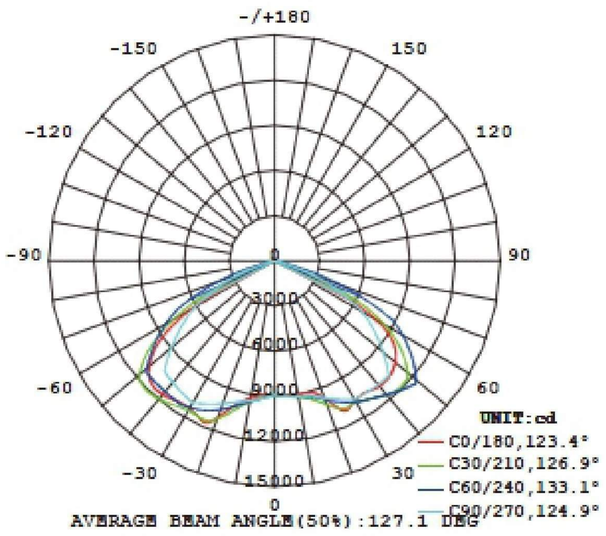

C:Type Ⅴ

Installation instruction

A-Slip fitter mount

B-Rotatable round pole mount

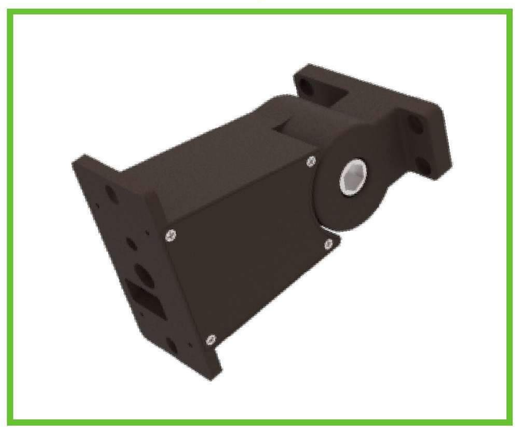

C-Square pole rotatable mount

D-Trunnion

Very easy to change different mount types. Can DIY with a screw tool

Functions of each mount type

◉ A:Slip fitter mount suitable for round pole, rotatable beam angle

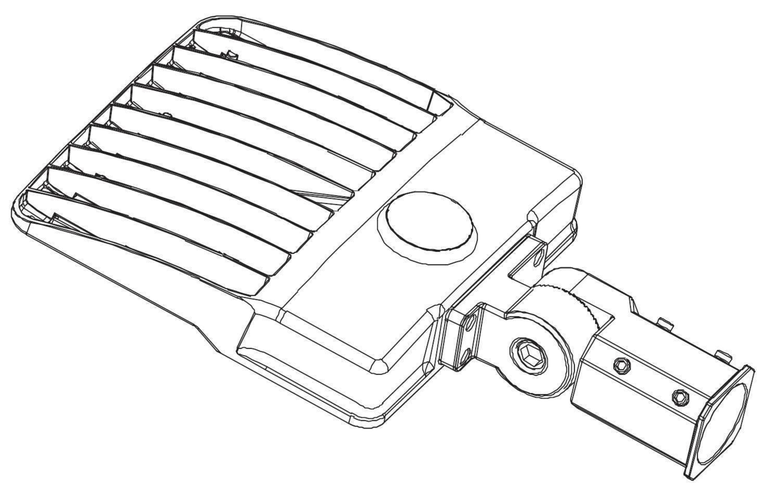

1.Products received by customer.

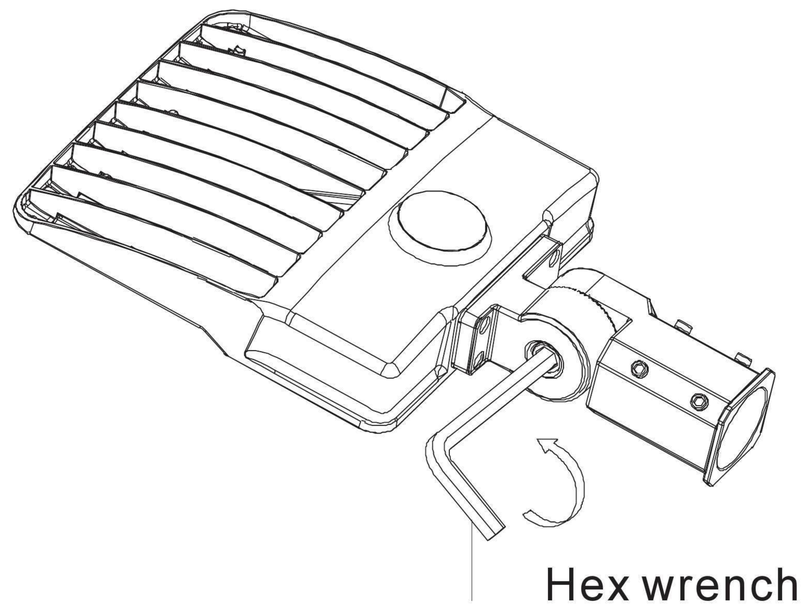

2.Loosen the screw used to fix the upper and the lower mo unt in rotating shaft by Hex-wrench.

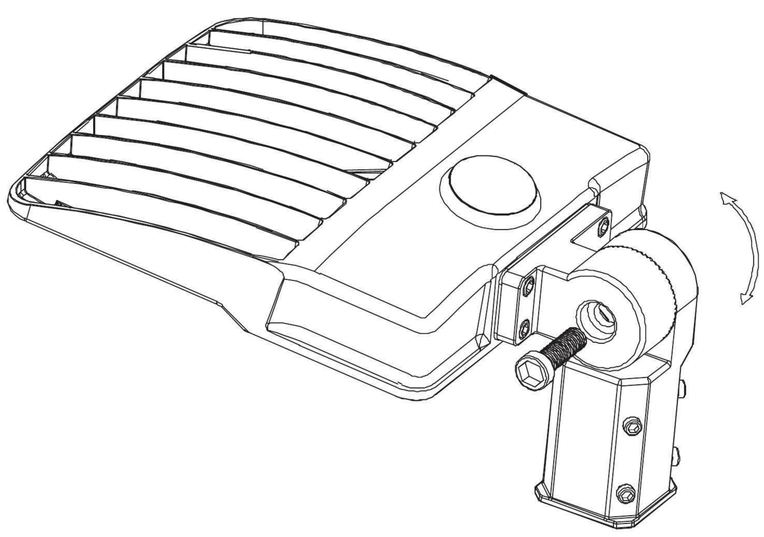

3.Swivel the mount into the right ang le.

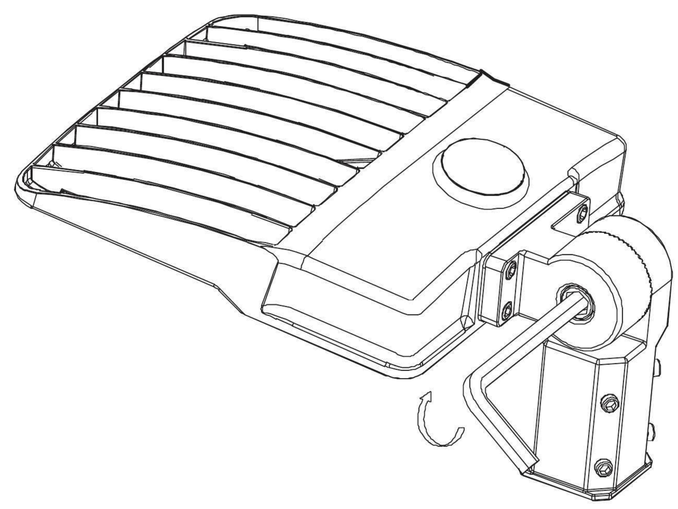

4.Screw down the upper and the lower mount by Hex-wrench.

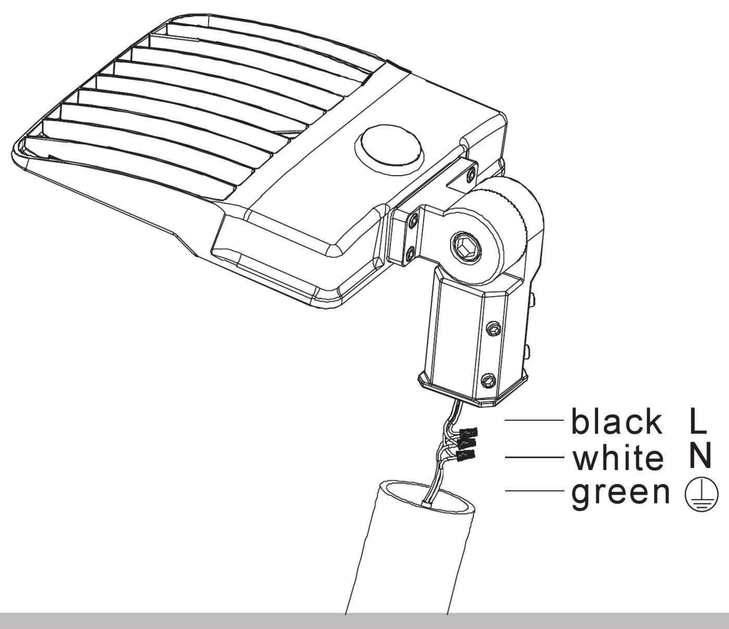

5. Connect wires.

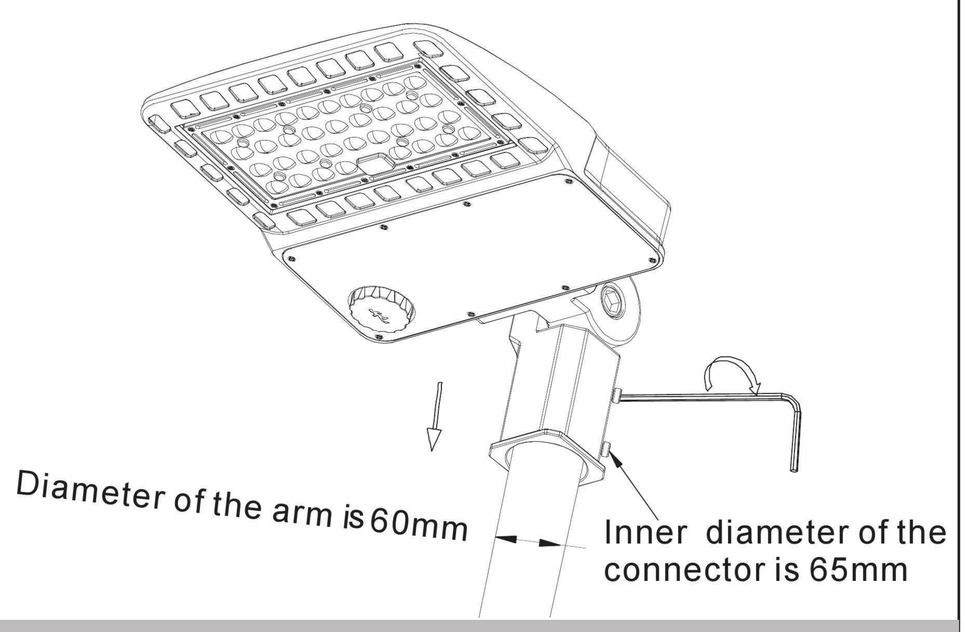

6. Connect the mount with the light pole, and screw down by Hex-wrench. Installation completed.

Mount for pole Installation Instruction

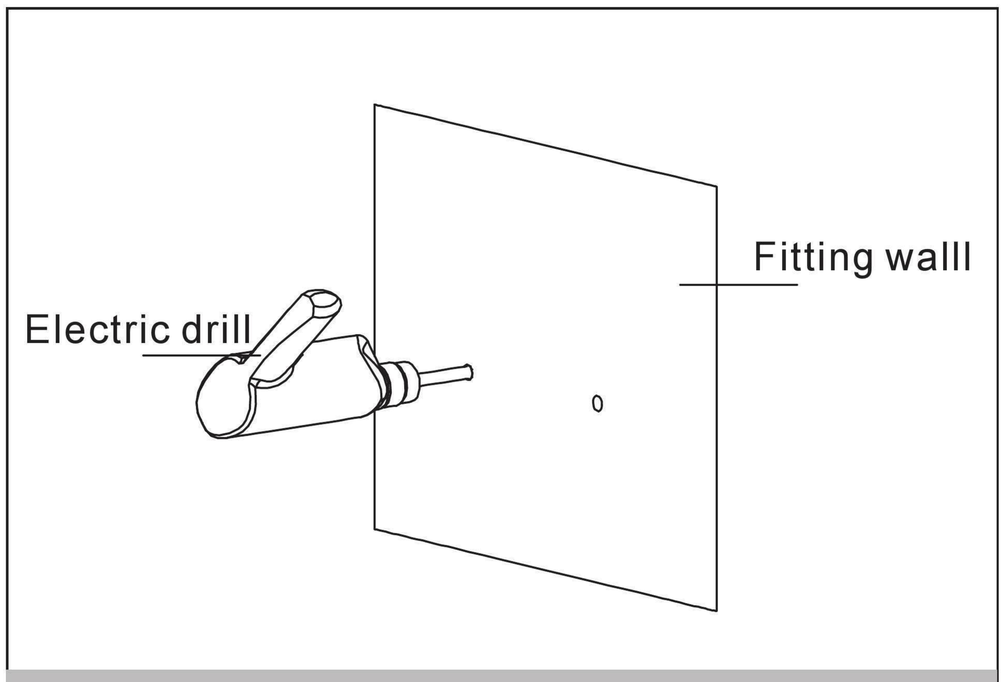

1. In line with the distance between the screw holes inthe mount, drill mounting holes on the wall by electric drill.

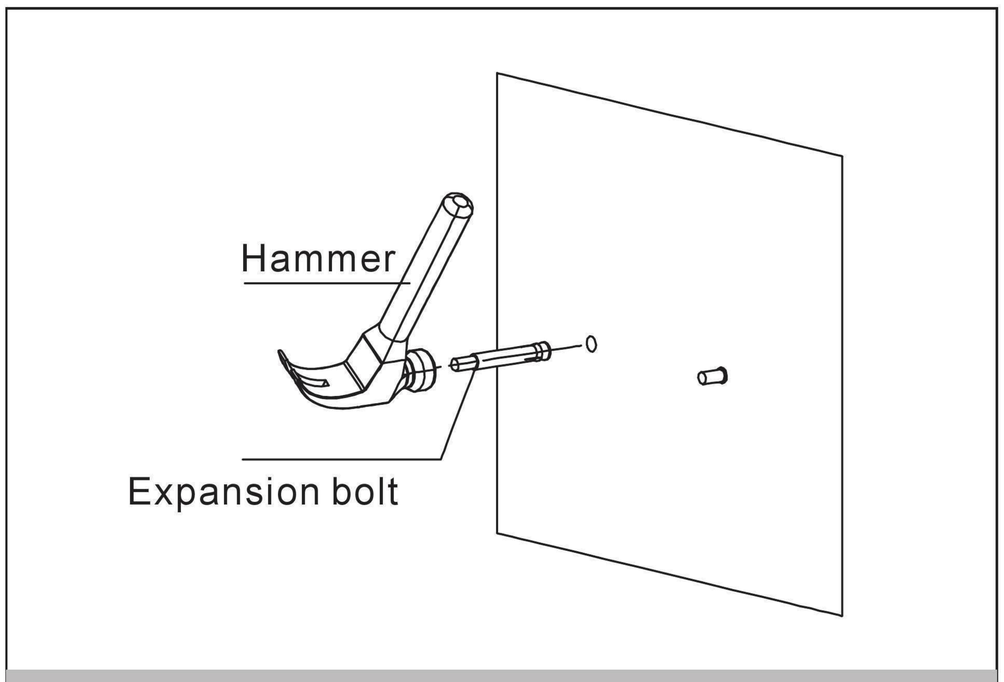

2. Hammer expansion bolts into the mounting holes, while the threads of hte expansion bolts need to be exposed.

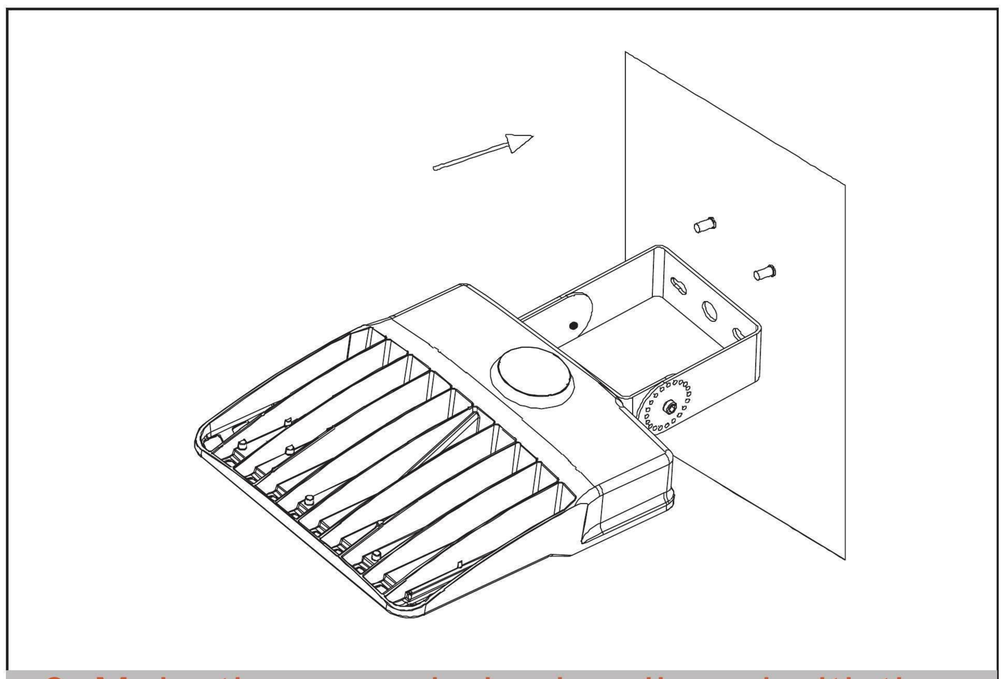

3. Make the screw holes be aligned with the mounting holes and pass through the expansion bolts, then push the Floodlight by the direction of the arrow until its mount sticks to the wall.

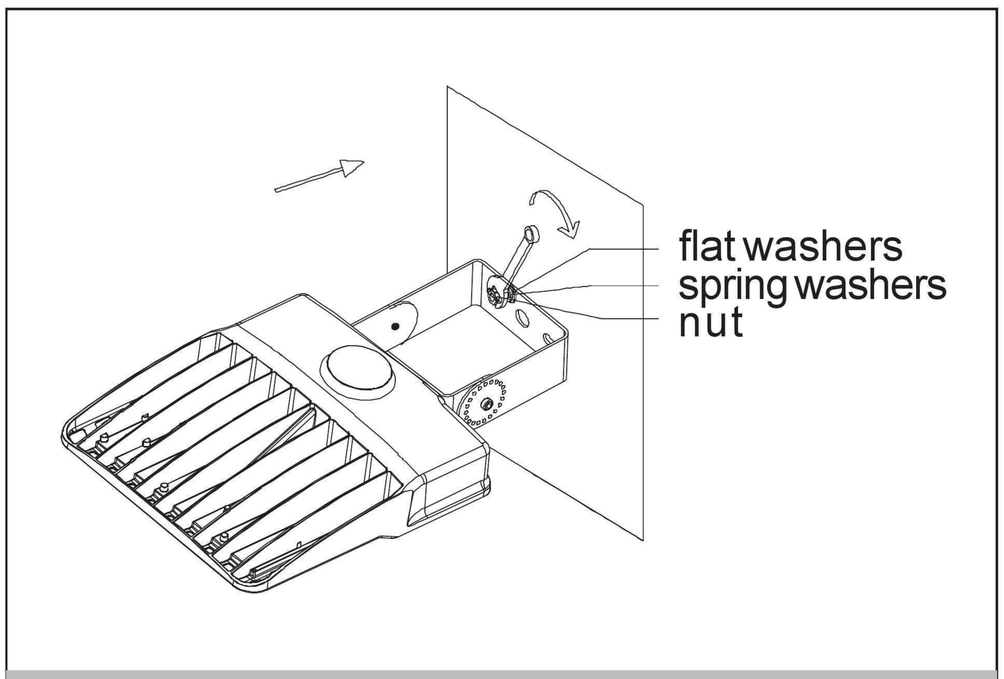

4. Flat washers, spring washers and nuts are respectively fixed in sequence on the expansion bolts, and tighten the nuts by wrench by the direction of the arrow.

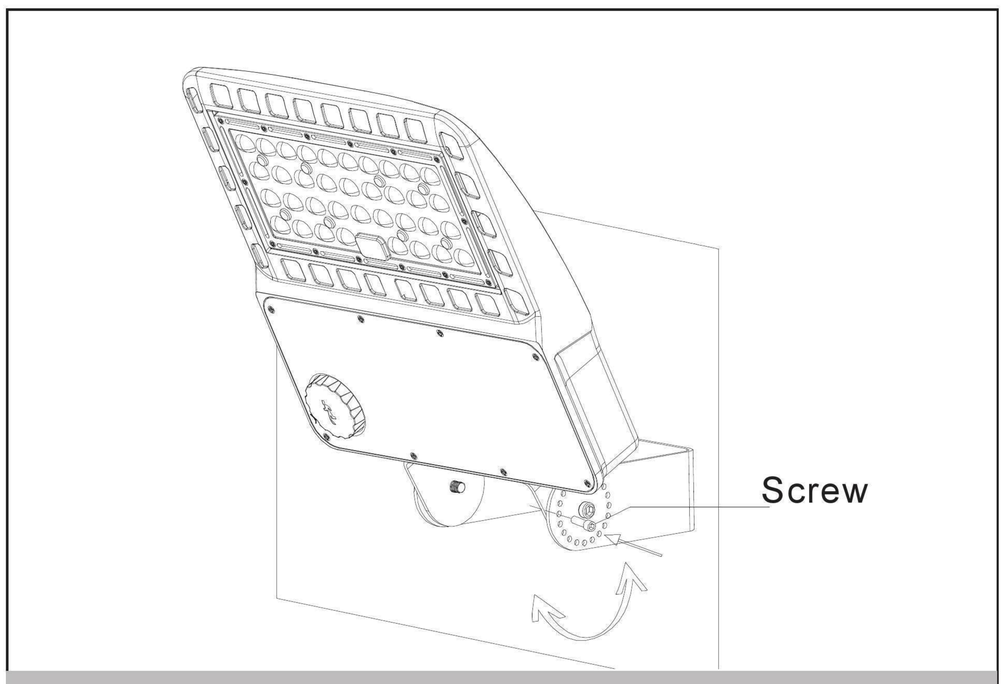

5. Swivel the Floodlight by the direction of the arrow into the right angle, and tighten the small screws of the mount.

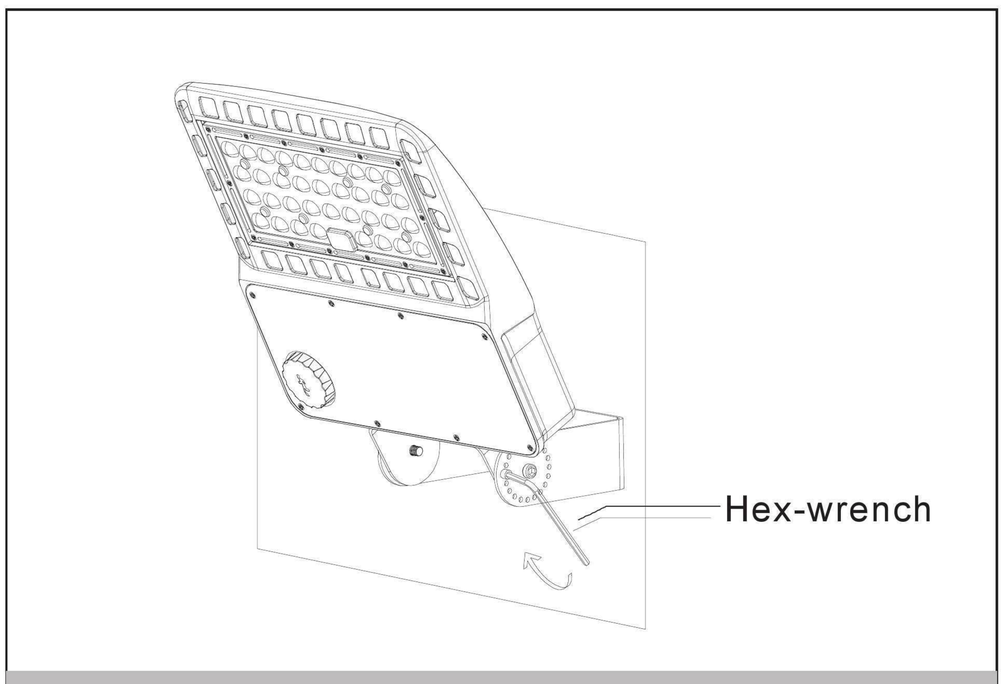

5. Swivel the Floodlight by the direction of the arrow into the right angle, and tighten the small screws of the mount.

Mount for pole Installation Instruction

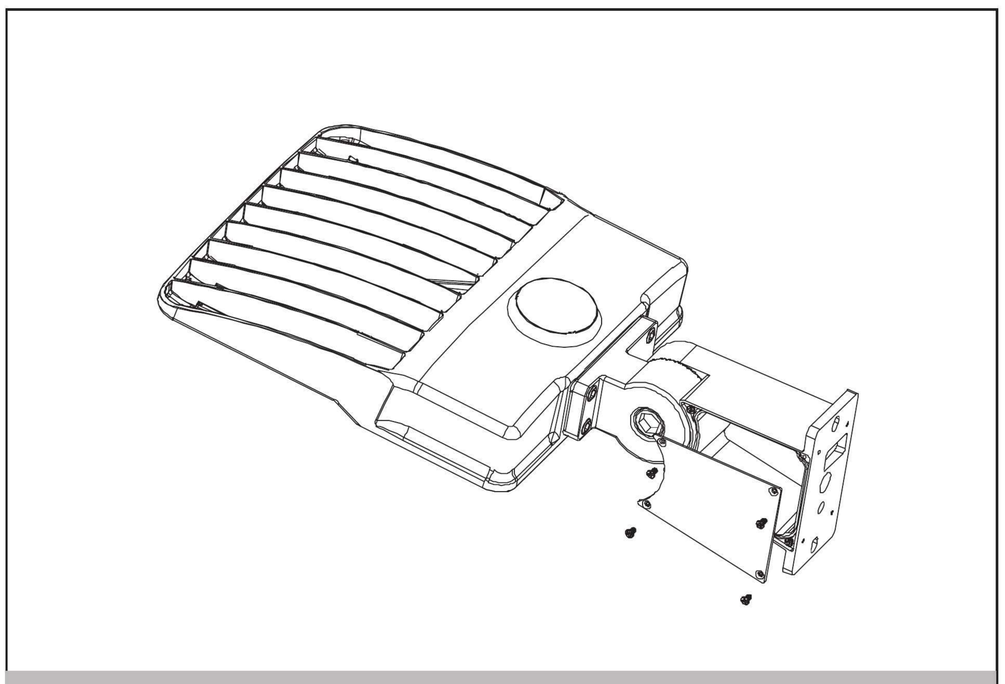

1.Unscrew the mount cover by screwdriver

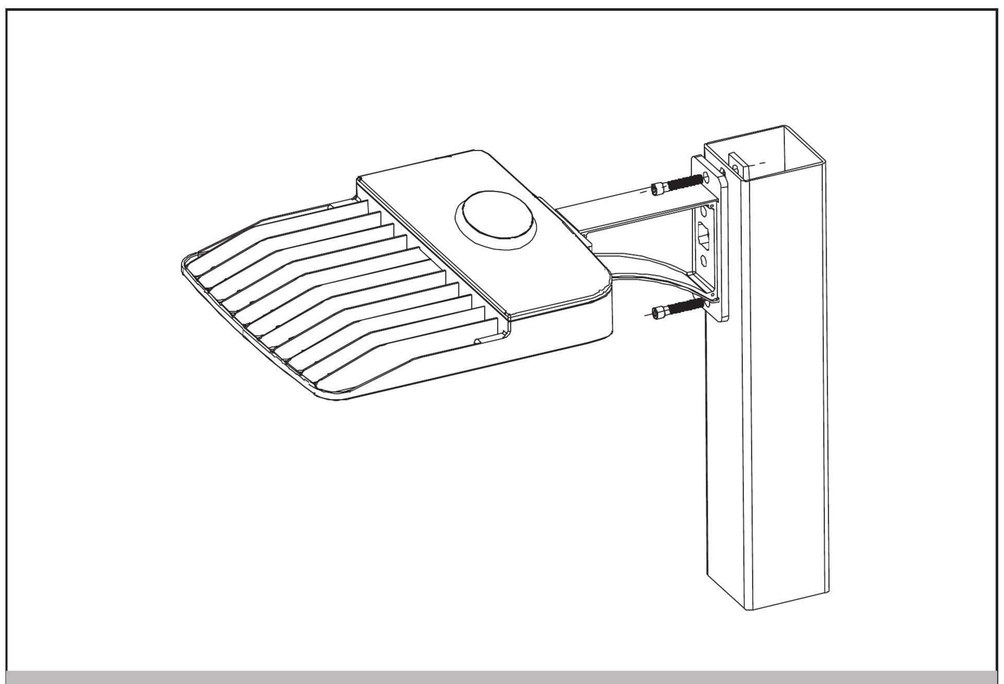

2.Screw down the mount onto the light pole through the mounting hole.

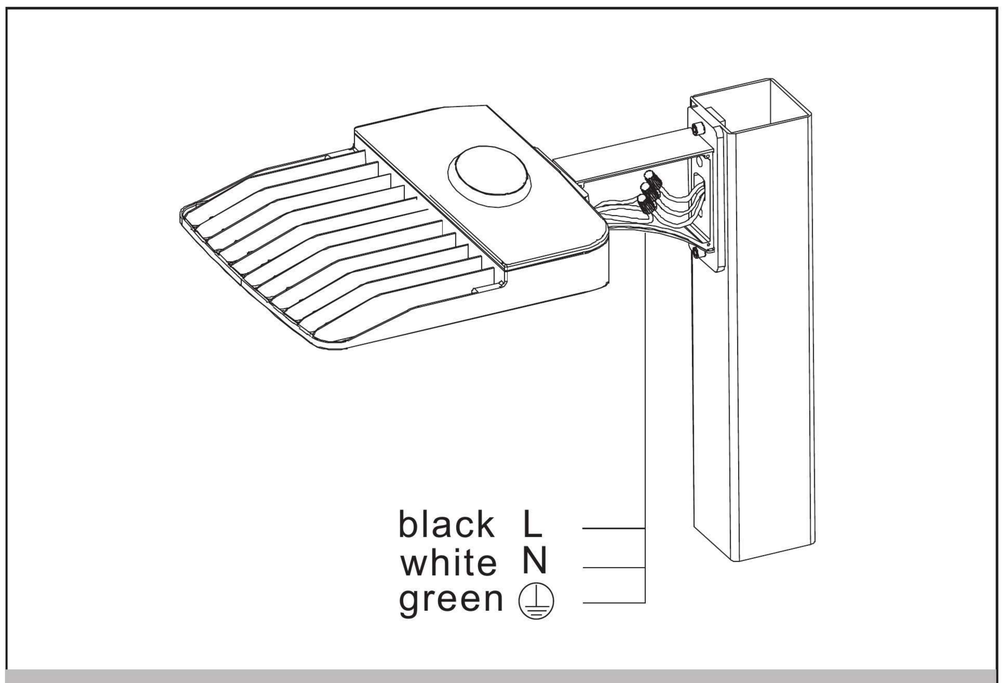

3.Connect wires.

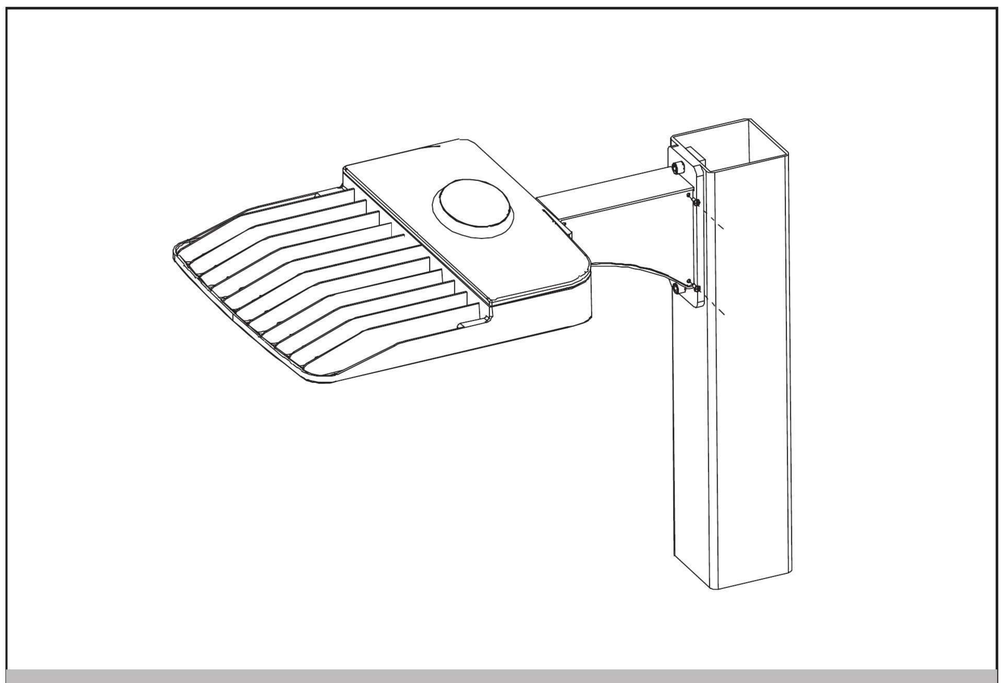

4.Screw up the terminal box.
Installation completed.

Mount for pole Installation Instruction

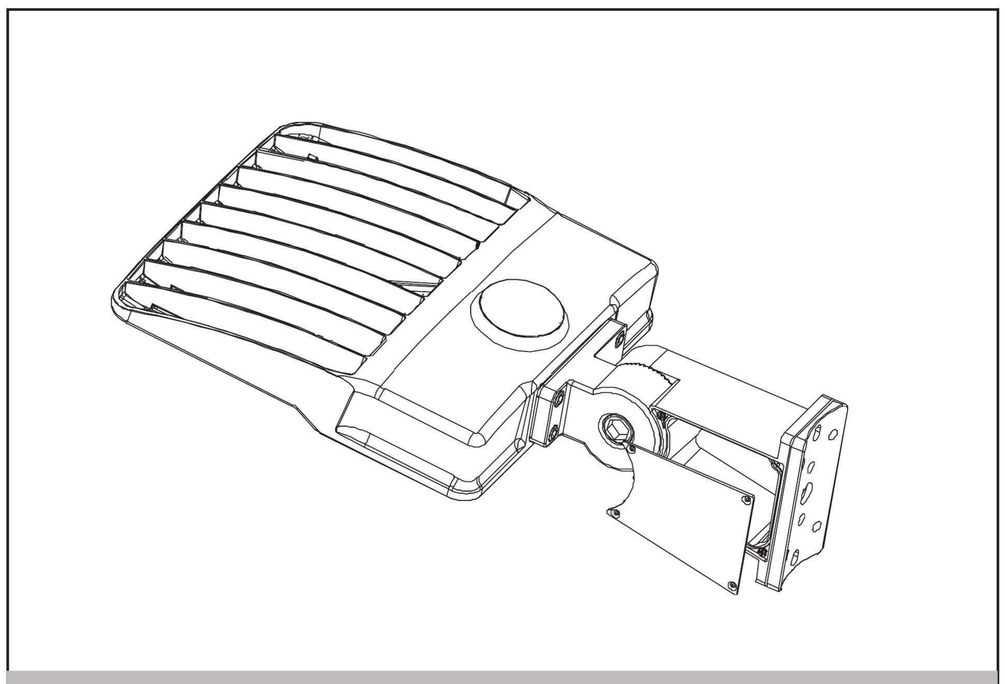

1.Unscrew and remove the cover of the terminal box by screwdriver.

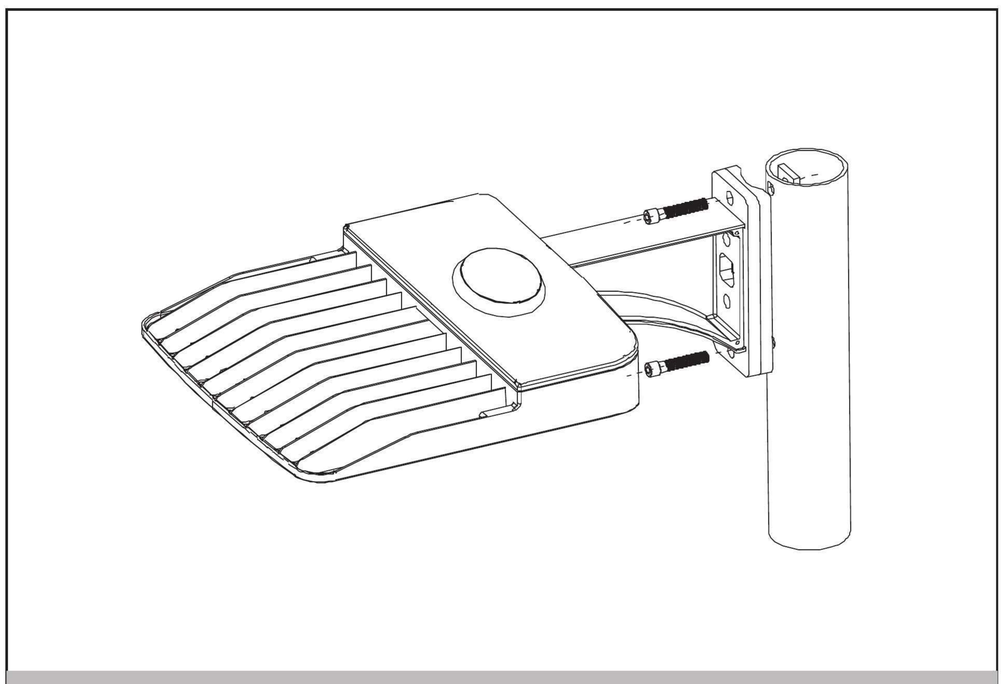

2.Screw down the mount onto the light pole through the mounting hole.

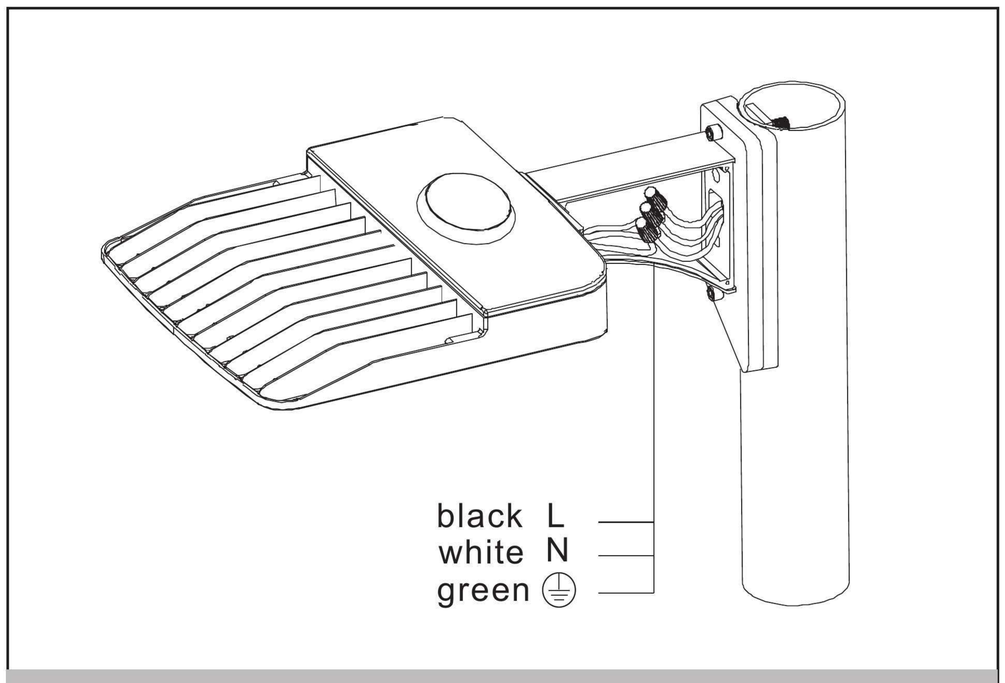

3.Connect wires.

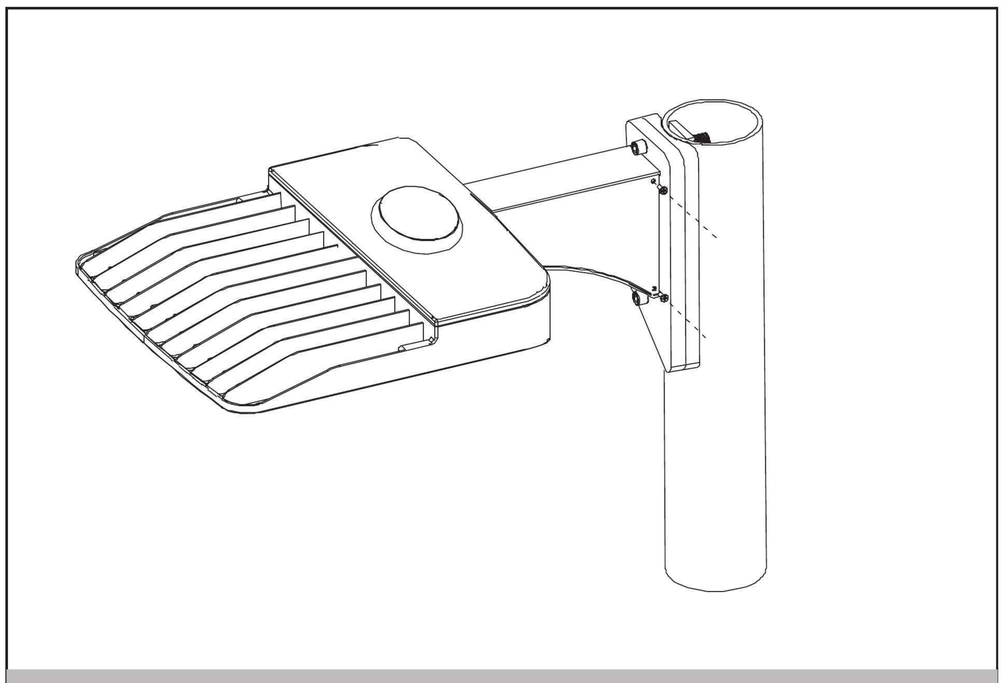

4.Screw up the terminal box.
Installation completed.

Packing /weight

Only Mounts

Part No.	Outer Carton Size (LxWxH)	Qty/Carton (pcs)	Net weight (kg)(lbs)	Gross weight (kg)(lbs)	20GP (qty)	40HQ (qty)
A-Slip fitter mount	(425*415*175mm) (16.73”x16.34”x6.89”)	20pcs	0.76kg (1.67lbs)	19.8kg (43.56 lbs)	15600	37800
B-Square and Round Pole Mount	(405*310*400mm) (15.95”x12.20”x15.75”)	20pcs	1.36kg (2.99lbs)	29.8kg (65.56 lbs)	11200	24360
C-Square Pole Mount	(405*310*400mm) (15.95”x12.20”x15.75”)	20pcs	1.36kg (2.99lbs)	29.8kg (65.56 lbs)	11200	24360
D-Trunnion	(365*320*335mm) (14.37”x12.60”x13.19”)	20pcs	1.4kg (3.1lbs)	32.8kg (72.16 lbs)	13940	32420

Without Mounts

Part No.	Outer Carton Size (LxWxH)	Qty/Carton (pcs)	Net weight (kg)(lbs)	Gross weight (kg)(lbs)	20GP (qty)	40HQ (qty)
SXT-200W-H-H-XXXXK	(442*330*95mm) (17.40”x12.99”x3.74”)	1pcs	4.7kg (10.3lbs)	5.3kg (11.7 lbs)	1875	4437
SXT-300W-H-H-XXXXK	(563*330*95mm) (22.17”x12.99”x3.74”)	1pcs	5.8kg (12.8lbs)	6.4kg (14.1 lbs)	1500	3550
SXT-400W-H-H-XXXXK	(686*330*105mm) (27.0”x12.99”x4.13”)	1pcs	8.1kg (17.8 lbs)	8.9kg (19.6 lbs)	1111	2629

Packing

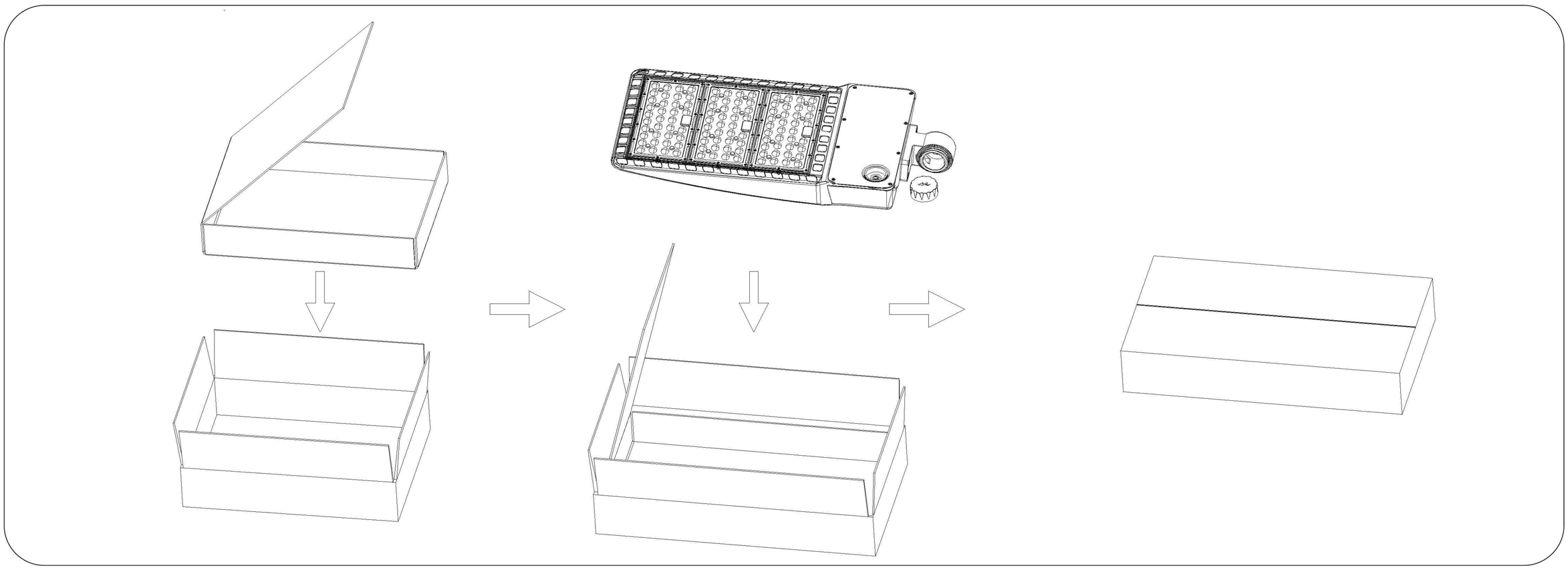

LED Shoebox Light

Note

1.The installation and maintenance must be completed by electricians or professionals.

2.Please cut off the power before installation and maintenance.

3.The fixture is not allowed to be covered by thermally insulating material.

4. Please keep away from the corrosive substance,and keep the fixture dry and clean.

5. Working temperature:-4°F~104°F,storage temperature:-22°F~140°F.

Tel: +86(0)755 29985870 Web: www.gielight.com Email: gielight@gielight.com

Address:Building B,Jinfeng Industrial Zone,Yonghe Road, Heping community,Fuhai Street,Bao'an District ,Shenzhen,China.